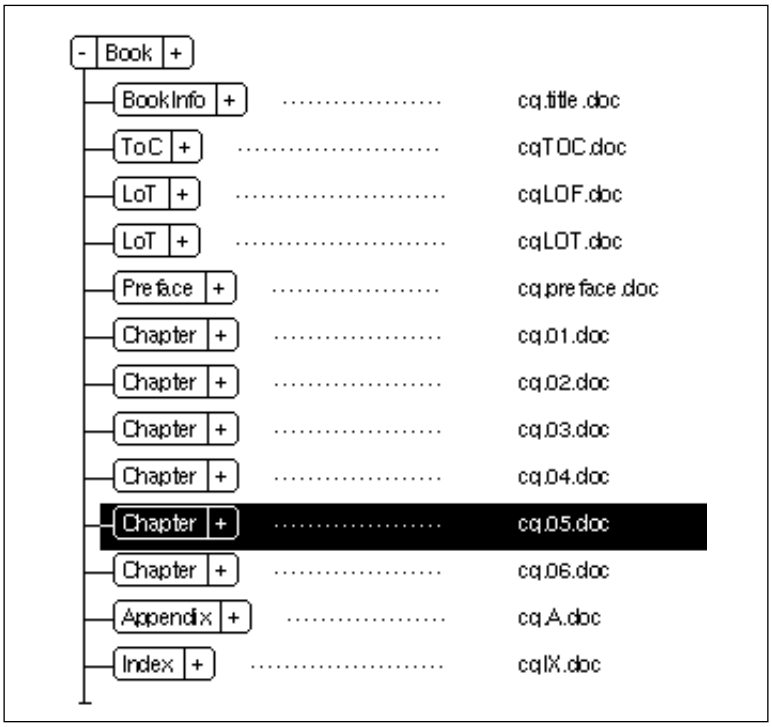
- Book +
BookInfo + cq.title.doc
ToC + cqTOC.doc
LoT + cqLOF.doc
LoT + cqLOT.doc
Preface + cq.preface.doc
Chapter + cq.01.doc
Chapter + cq.02.doc
Chapter + cq.03.doc
Chapter + cq.04.doc
Chapter + cq.05.doc
Chapter + cq.06.doc
Appendix + cq.A.doc
Index + cqIX.doc